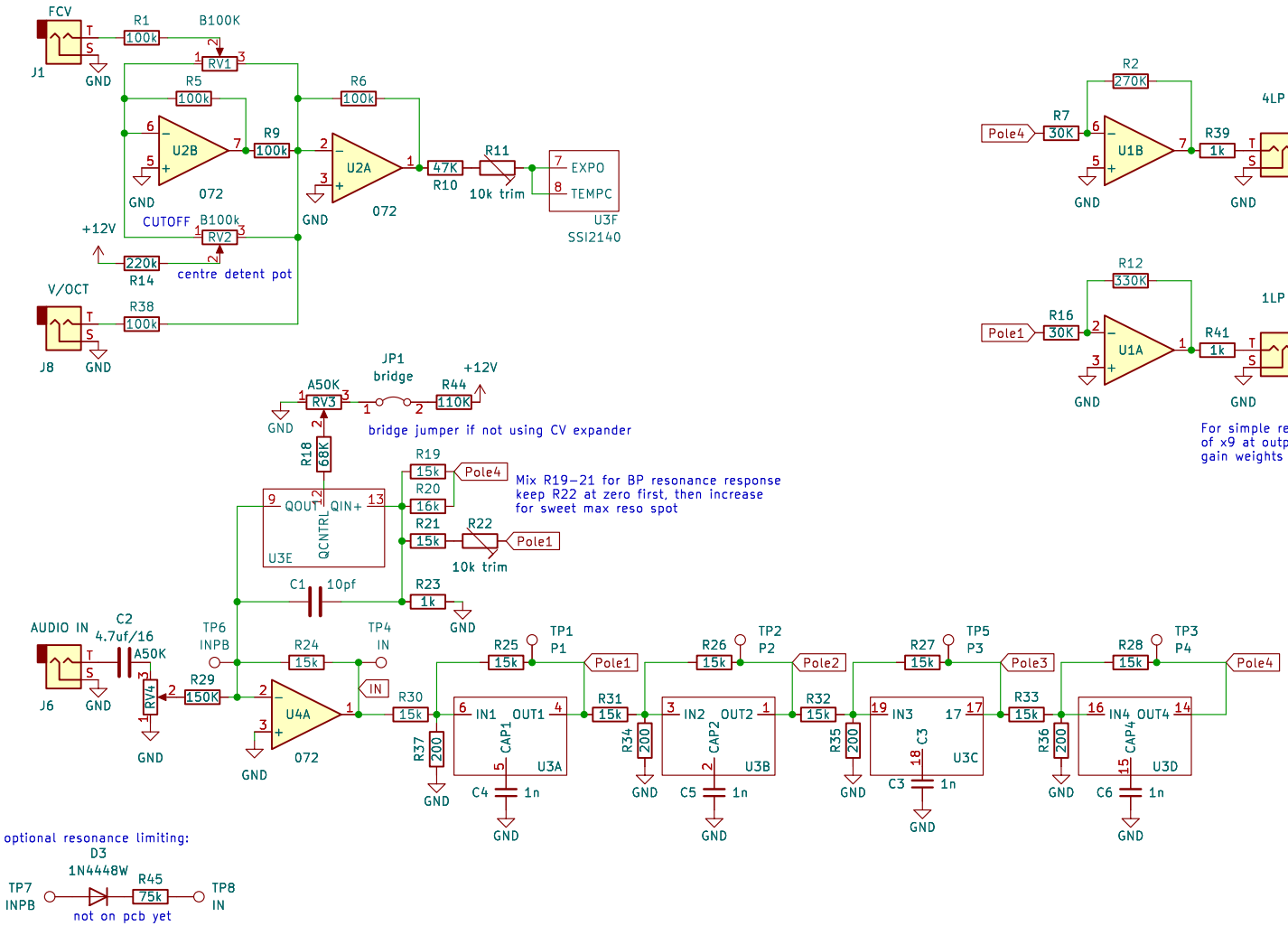

expandible for RCV and more filter responses

CC–BY–SA–NC

maffez

Sheet: /

File: Poley_2140.kicad_sch

Title: 2140 Polemix with BP resonance

Size: A4	Date: 2024–02–25	**Rev: 0.4**
KiCad E.D.A. eeschema 7.0.10		Id: 1/1